Actuator for Butterfly Valve
LKLA-T ø133 (A/A)
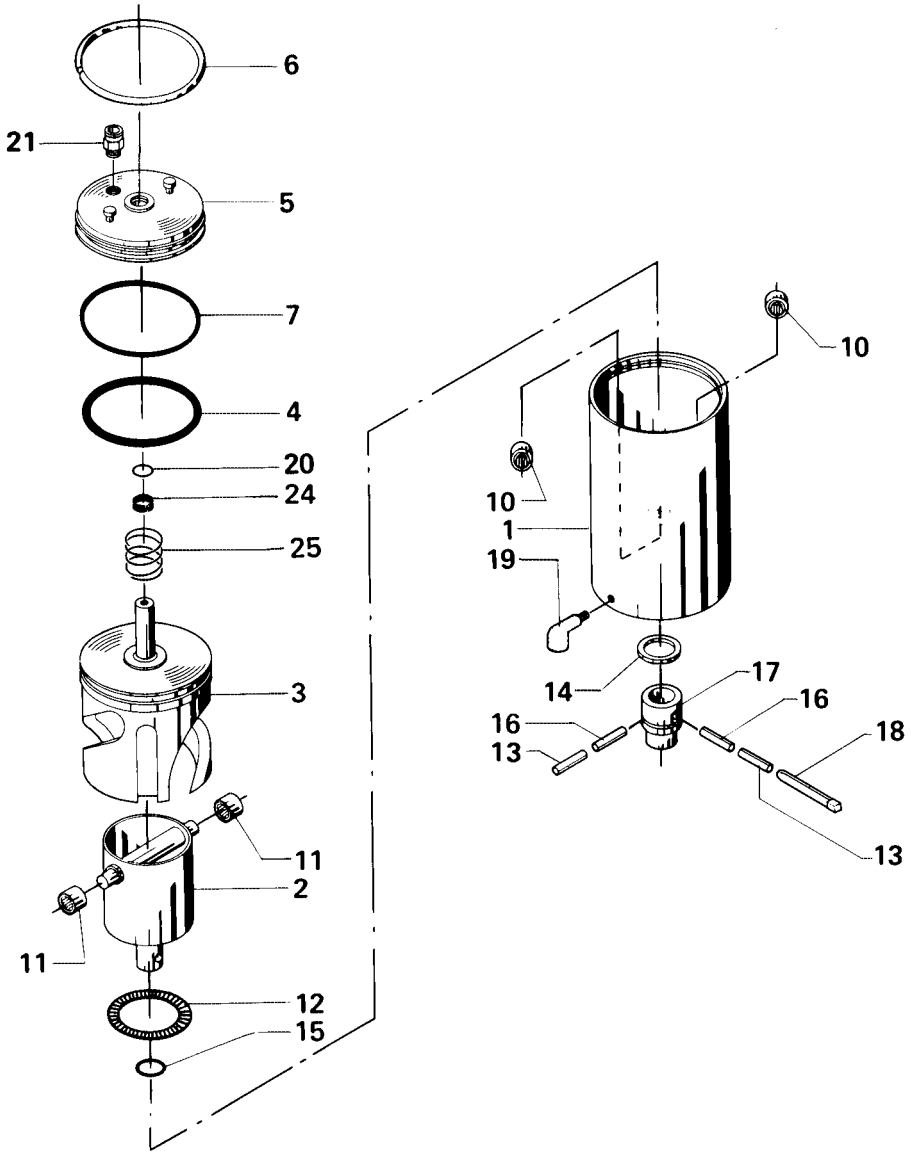
Note: Actuator compatible with Think Top.
(not for use with Green Tri-Clover Tops)